4BLT-DIFF

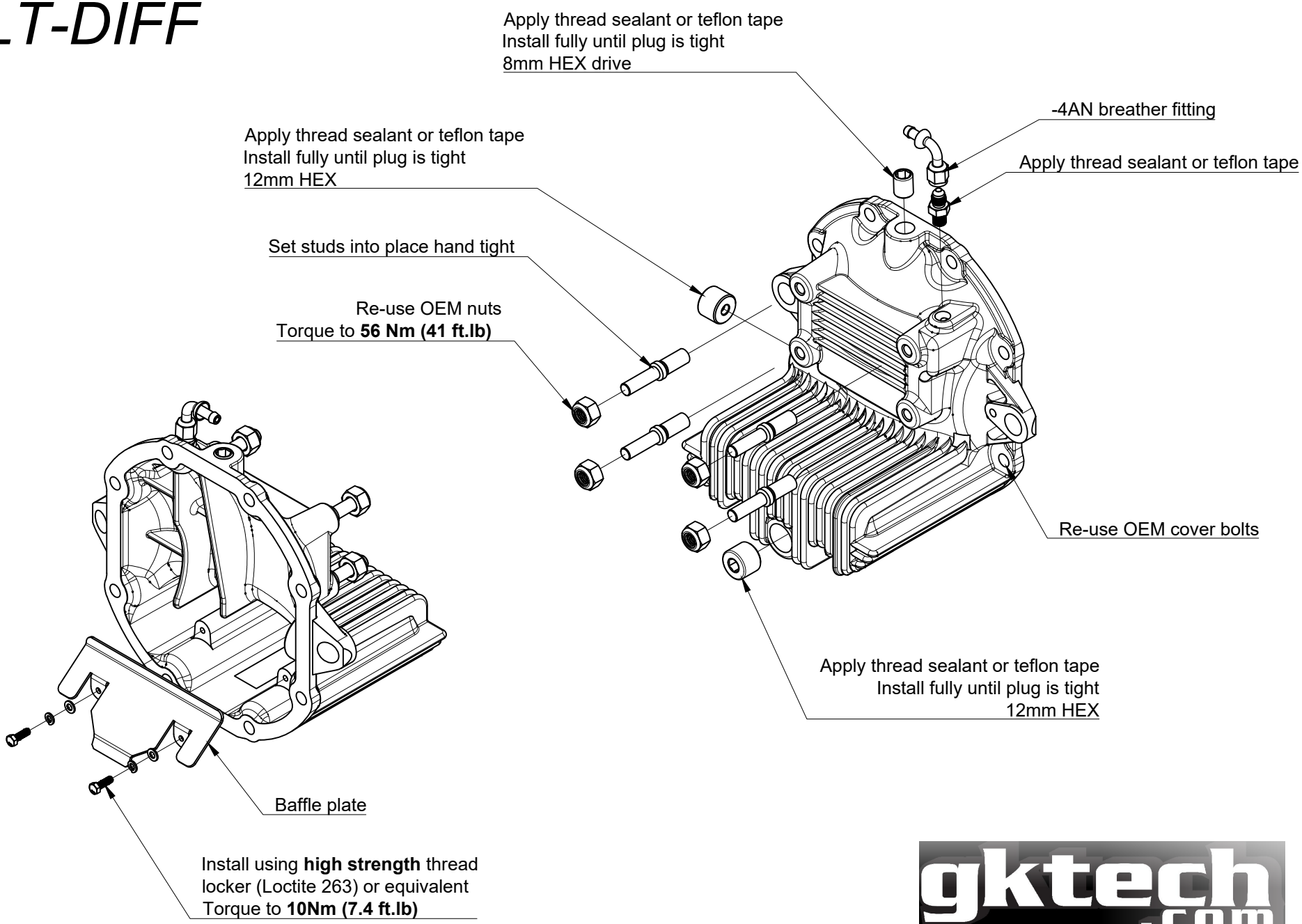
Apply thread sealant or teflon tape
Install fully until plug is tight
8mm HEX drive
-4AN breather fitting
Apply thread sealant or teflon tape
Apply thread sealant or teflon tape
Install fully until plug is tight
12mm HEX
Set studs into place hand tight
Re-use OEM nuts
Torque to **56 Nm (41 ft.lb)**
Re-use OEM cover bolts
Apply thread sealant or teflon tape
Install fully until plug is tight
12mm HEX
Baffle plate
Install using **high strength** thread
locker (Loctite 263) or equivalent
Torque to **10Nm (7.4 ft.lb)**