R334-KNCK

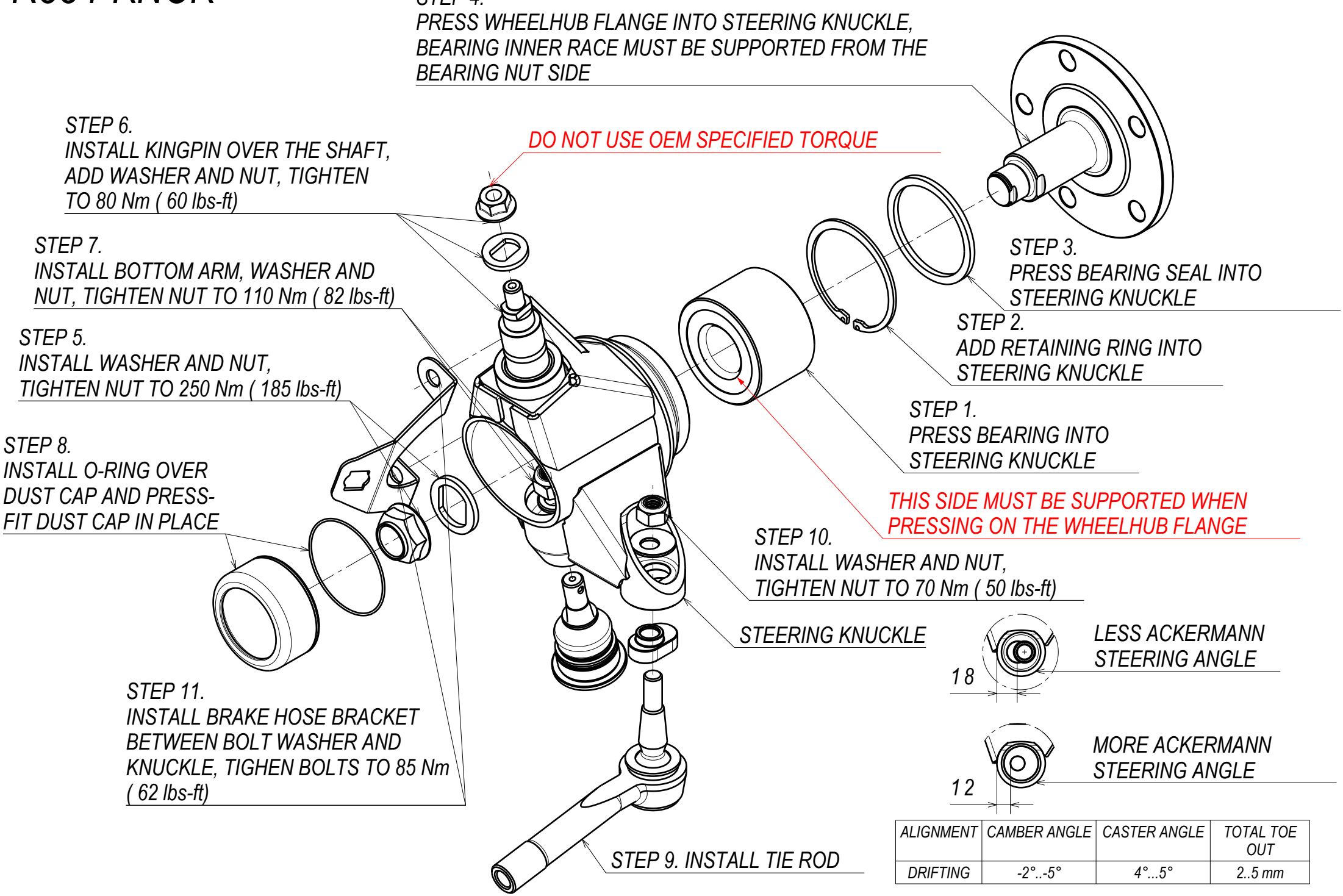

ALIGNMENT	CAMBER ANGLE	CASTER ANGLE	TOTAL TOE OUT
DRIFTING	-2°..-5°	4°...5°	2..5 mm